Anemostat®
AIR DISTRIBUTION

MODEL **SC2**

EXTRUDED ALUMINUM GRILLE SCREEN ANGULAR HORIZONTAL BAR

MODULAR GRILLE SCREEN - STATIONARY

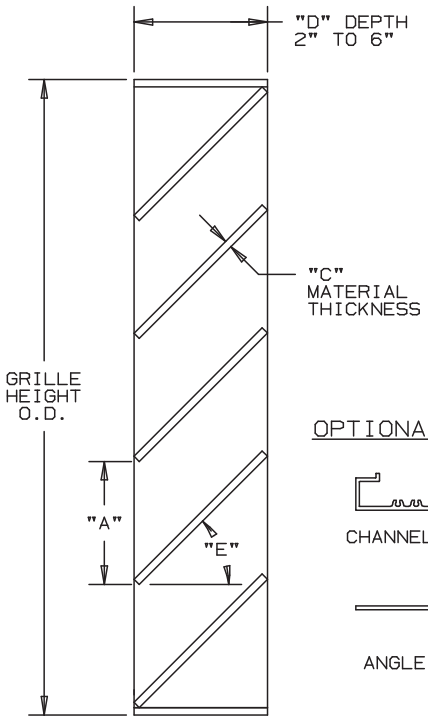

NOT TO SCALE

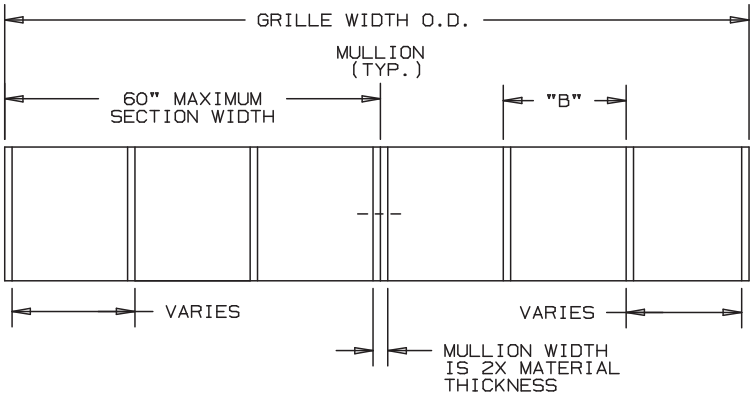

OPTIONAL FRAMES

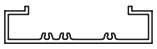

CHANNEL FRAME

ANGLE FRAME

SPECIFICATIONS

FRAME/BLADE: EXTRUDED ALUMINUM 6063-T6/T52 ALLOY, .125" TO .250" NOMINAL THICKNESS. BLADES CAN BE 2" TO 12" VERTICAL AND HORIZONTAL SPACING. HORIZONTAL BLADE ANGLE FROM 0° TO 45°. GRILLE DEPTH CAN BE 2" TO 6" DEEP. ALL WELDED CONSTRUCTION.

FINISH: FACTORY MILL.

MINIMUM SINGLE PANEL SIZE: 12" x 12"
MAXIMUM SINGLE PANEL SIZE: 60" x 96" (40 SQ. FT.)

"A" = 2" TO 12" (HORIZONTAL BLADE SPACING)
"B" = 2" TO 12" (VERTICAL BLADE SPACING)
"C" = .125" TO .250" (MATERIAL THICKNESS)
"D" = 2" TO 6" (GRILLE DEPTH)
"E" = 0° TO 45° (BLADE ANGLE)

NOMINAL DEDUCTIONS WILL BE MADE TO OPENING SIZES GIVEN.

ITEM	QTY.	WIDTH	HEIGHT	WIDTH	HEIGHT	MULL.	"A"	"B"	"C"	"D"	"E"
		OPENING SIZE		GRILLE SIZE (O.D.)							

UNION MADE

Anemostat Air Distribution
1220 E. Watson Center Road
Carson, CA 90745
310-835-7500 • air@anemostat.com
www.anemostat-hvac.com

AGENT: _____

ARCH./ENG.:
CONTR.:
PROJECT:
EDR: ECN: JOB:
DATE: DWN.: DWG.: