SUBMITTAL SHEET

Anemostat®
A MESTEK COMPANY
P.O. BOX 4938 • 1220 WATSONCENTER ROAD • CARSON, CA 90745-4206
(310) 835-7500 • FAX (310) 835-0448
e-mail: airsec@anemostat.com • website: www.anemostat.com

ADBG

MAXIMUM SECURITY

EXTRA HEAVY DUTY
DUCT BARRIER GRILLE

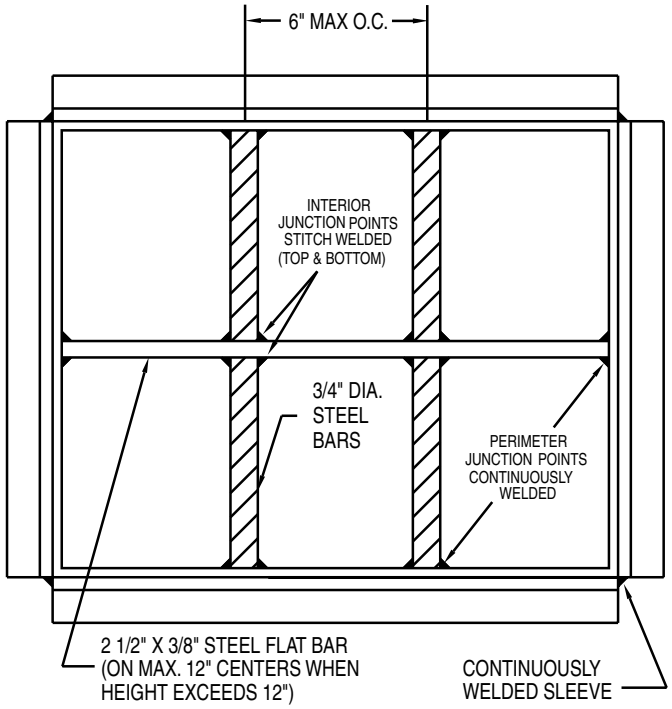

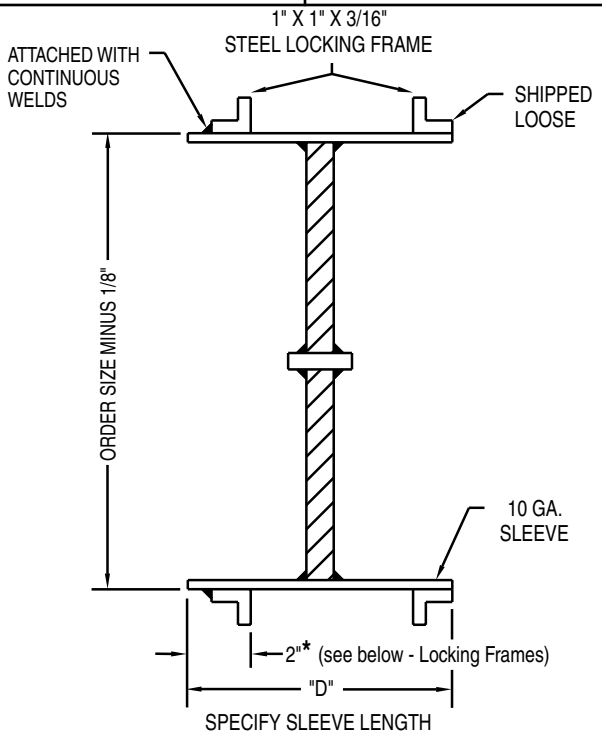

IMPORTANT: It is the specifier's responsibility to properly configure the HVAC system to meet the appropriate level of comfort, safety, security and detention

PRODUCT FEATURES

Vertical Round Bars

- ☐ 3/4" Diameter **(standard)** on 6" max. ctrs.
- ☐ Other _____

Horizontal Flat Bar

- ☐ 2 1/2" x 3/8" **(standard)** (on max. 12" ctrs. when height exceeds 12")
- ☐ Other _____

Sleeve

- ☐ 10 GA. **(standard)**
- ☐ 3/16 (optional)
- ☐ Without Sleeve (optional)
- ☐ Other _____

Locking Frames - (one welded, one loose)

- ☐ 1" x 1" x 3/16" **(standard)**
- ☐ *1 1/2" x 1 1/2" x 3/16" (optional)
- ☐ *2" x 2" x 3/16" (optional)
- ☐ Other _____

* Dimension from edge of sleeve to edge of welded frame, may vary based on size of locking frame used. Please specify

Material

- ☐ Cold Rolled Steel **(standard)**
- ☐ *Stainless Steel (optional)
- ☐ *Aluminum (optional)
- ☐ *Galvanized (optional)
- ☐ Other _____

*consult factory for availability

Tool Resistant Steel -(optional)

- ☐ Vertical Round Bars
- ☐ Horizontal Flat Bar

Anchoring Studs -(optional)

- ☐ Nelson Type (3" x 3/8")
- ☐ Other _____

Finish

- ☐ White Powder Coat **(standard)**
- ☐ Rust Inhibiting Prime Coat (optional)
- ☐ Other _____

Other Options (please specify)

_____

_____

Qty.	Order Size (Nominal Duct)		Sleeve Length
	W" x	H"	D

SUBMITTAL APPROVAL

Job Name and Location			
Engineer	Date	Factory	Date
Mfr. Rep.	Date	Submitted By	Date