MODEL
- ❑ **API** - ARCHITECTURAL SLOT DIFFUSER

PATTERN CONTROLLERS
- ❑ SLAD STYLE
- ❑ FREE FLO STYLE

NUMBER OF SLOTS
- ❑ 1 SLOT
- ❑ 3 SLOT
- ❑ 2 SLOT
- ❑ 4 SLOT

SLOT WIDTH
- ❑ 1/2" SLOT
- ❑ 3/4" SLOT
- ❑ 1" SLOT

NOMINAL LENGTH
24" TO 60" SINGLE PIECE CONSTRUCTION

INLET SIZE
- ❑ 4" Ø
- ❑ 8" Ø
- ❑ 5" Ø
- ❑ 9" Ø
- ❑ 6" Ø
- ❑ 10" Ø
- ❑ 7" Ø
- ❑ 12" Ø

INSULATION TYPE
- ❑ NO INSULATION
- ❑ STANDARD 1/2" INTERNAL GLASS FIBER
- ❑ FOIL FACED EXTERNAL
- ❑ FOIL FACED INTERNAL
- ❑ CLOSED CELL "FIBER-FREE" FOAM

INLET DAMPER
- ❑ NONE
- ❑ DAMPER

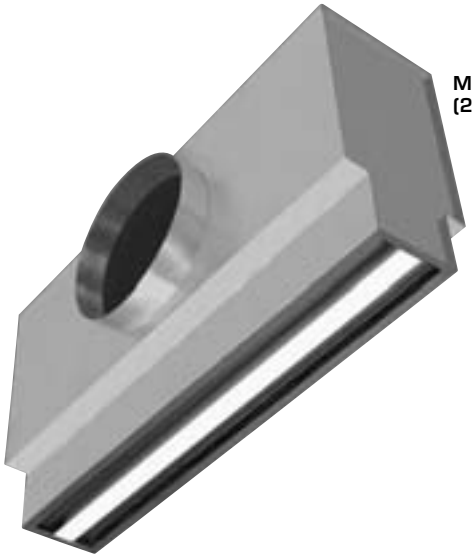

Model API-S Shown (2 Slot)