# SUBMITTAL SHEET

Anemostat®
A MESTEK COMPANY
P.O. BOX 4938 • 1220 WATSONCENTER ROAD • CARSON, CA 90745-4206
(310) 835-7500 • FAX (310) 835-0448
e-mail: airsec@anemostat.com • website: www.anemostat.com

# S1-MS S2-MS

**MINIMUM SECURITY**

**S1-MS** (SGL) / **S2-MS** (DBL)
DEFLECTION GRILLE
with LATTICE FACE PLATE

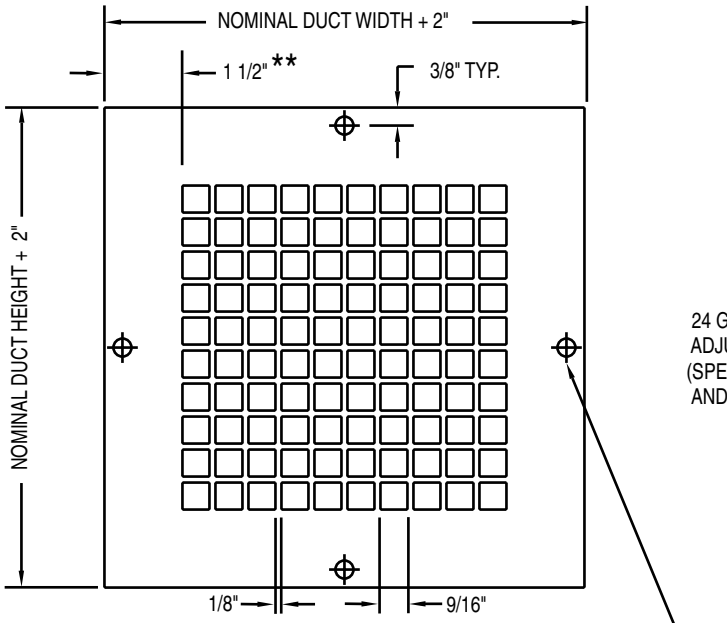


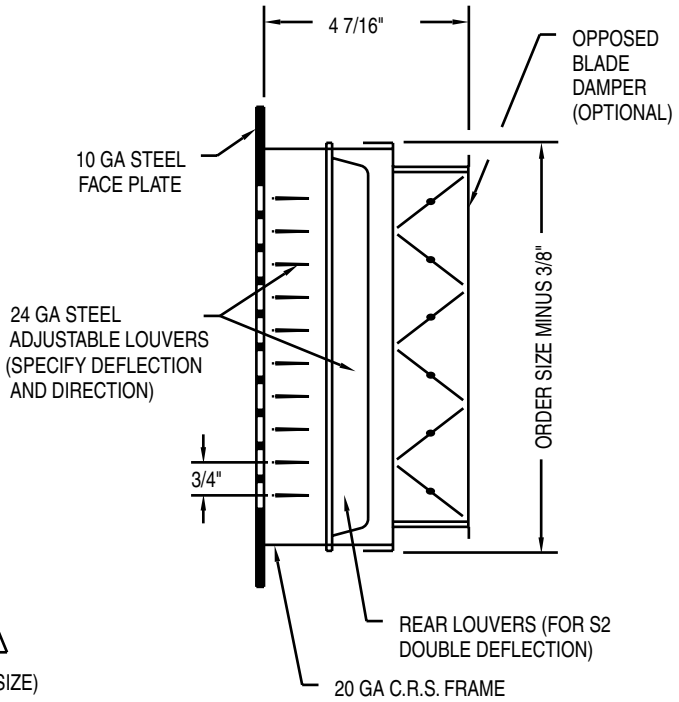


****** DIMENSION IS A FUNCTION OF SIZE AND PATTERN.

***IMPORTANT:*** It is the specifier's responsibility to properly configure the HVAC system to meet the appropriate level of comfort, safety, security and detention

## PRODUCT FEATURES

**Face Plate**
- ☐ 10 GA. **(standard)**
- ☐ 12 GA. (optional)
- ☐ 14 GA. (optional)

**Face Plate Patterns**
- ☐ 9/16" sq. on 11/16" ctrs. **(standard)**
- ☐ 13/16" sq. on 1" ctrs. (optional)
- ☐ 1/4" dia. holes on 3/8" stag. ctrs. (optional)
- ☐ 5/16" dia. holes on 7/16" stag. ctrs. (optional)

**Adjustable Louvers**
- ☐ **S1-MS** - single deflection
- ☐ **S2-MS** - double deflection

**Front Louver Direction**
- ☐ Vertical (V)
- ☐ Horizontal (H)

**Material**
- ☐ Cold Rolled Steel **(standard)**
- ☐ *Stainless Steel (optional)
- ☐ *Aluminum (optional)
- ☐ *Galvanized (optional)
- ☐ Other _____

*consult factory for availability

**Tamperproof Screws**
- ☐ #10 x 1-1/2" pinned flat head torx sheet metal screws **(standard)**
- ☐ Other _____

**Steel Sleeve** -(optional)
- ☐ 14 GA. (standard when sleeve is required)
- ☐ 10 GA. (optional)
- ☐ 12 GA. (optional)
- ☐ Other _____

**Locking Angles, two pieces** -(optional)
- ☐ 1" x 1" x 3/16" (standard when required)
- ☐ Other _____

**Opposed Blade Damper** -(optional)
- ☐ Front Operated ☐ Rear Operated
- ☐ Other _____

**Adapter** -(optional)
- ☐ Square to round (shipped loose)

**Finish**
- ☐ White Powder Coat **(standard)**
- ☐ Rust Inhibiting Prime Coat (optional)
- ☐ Other _____

**Other Options (please specify)**

_____

| Qty. | Order Size (Nominal Duct) | | Sleeve Length |
|---|---|---|---|
| | W" x | H" | D |
| | | | |
| | | | |
| | | | |
| | | | |
| | | | |
| | | | |
| | | | |
| | | | |
| | | | |
| | | | |

All dimensions are in inches.

**SUBMITTAL APPROVAL**

| Job Name and Location | | | |
|---|---|---|---|
| Engineer | Date | Factory | Date |
| Mfr. Rep. | Date | Submitted By | Date |