Anemostat®
AIR DISTRIBUTION

SUBMITTAL SHEET

www.anemostat-hvac.com

Model **FFXD**

SLOT DIFFUSER

COMBO FLUSH TO WALL
NO FLANGE / BEVELED FRAME
1 SLOT

DIFFUSER OPTIONS:

- ☐ Supply
- ☐ Return

PLENUM OPTIONS:

- ☐ Supplied by Anemostat
- ☐ Supplied by Others
- ☐ None Required

FINISH:

- ☐ Entire assembly flat black
- ☐ Outer frame white, pattern deflectors black
- ☐ Special paint instructions, please specify:

MODEL	W SLOT WIDTH	D
FFXD-100	1"	1-43/64
FFXD-150	1-1/2"	2-3/16
FFXD-250	2-1/2"	3-3/16

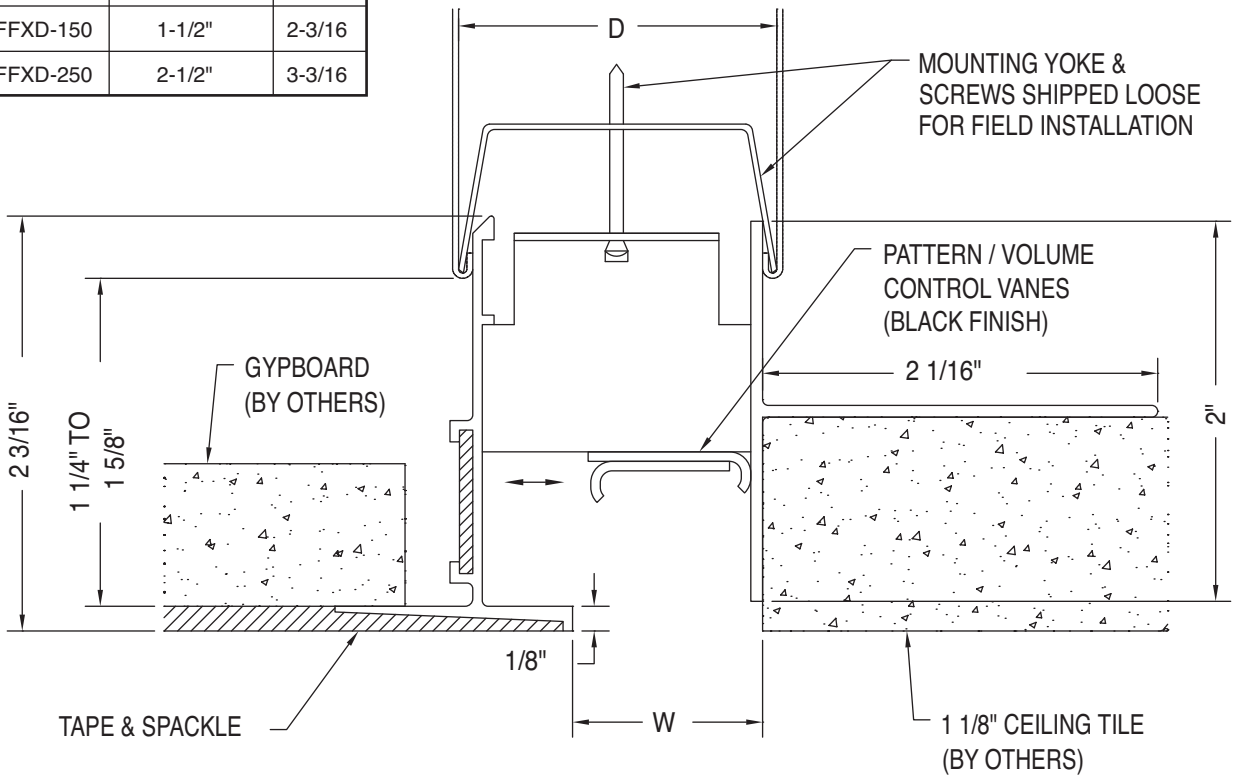

All dimensions are in inches.

JOB NAME: **SUBMITTED BY:**