Anemostat®
AIR DISTRIBUTION

MODEL **PHL4DP / PHL6DP**

LOUVERED PENTHOUSES EXTRUDED ALUMINUM
4" AND 6" DEEP BLADES

INTERIOR FASTENING INSTALLATION

POST CORNER - 4" OR 6" BLADE WIDTH
DRAINABLE - STATIONARY

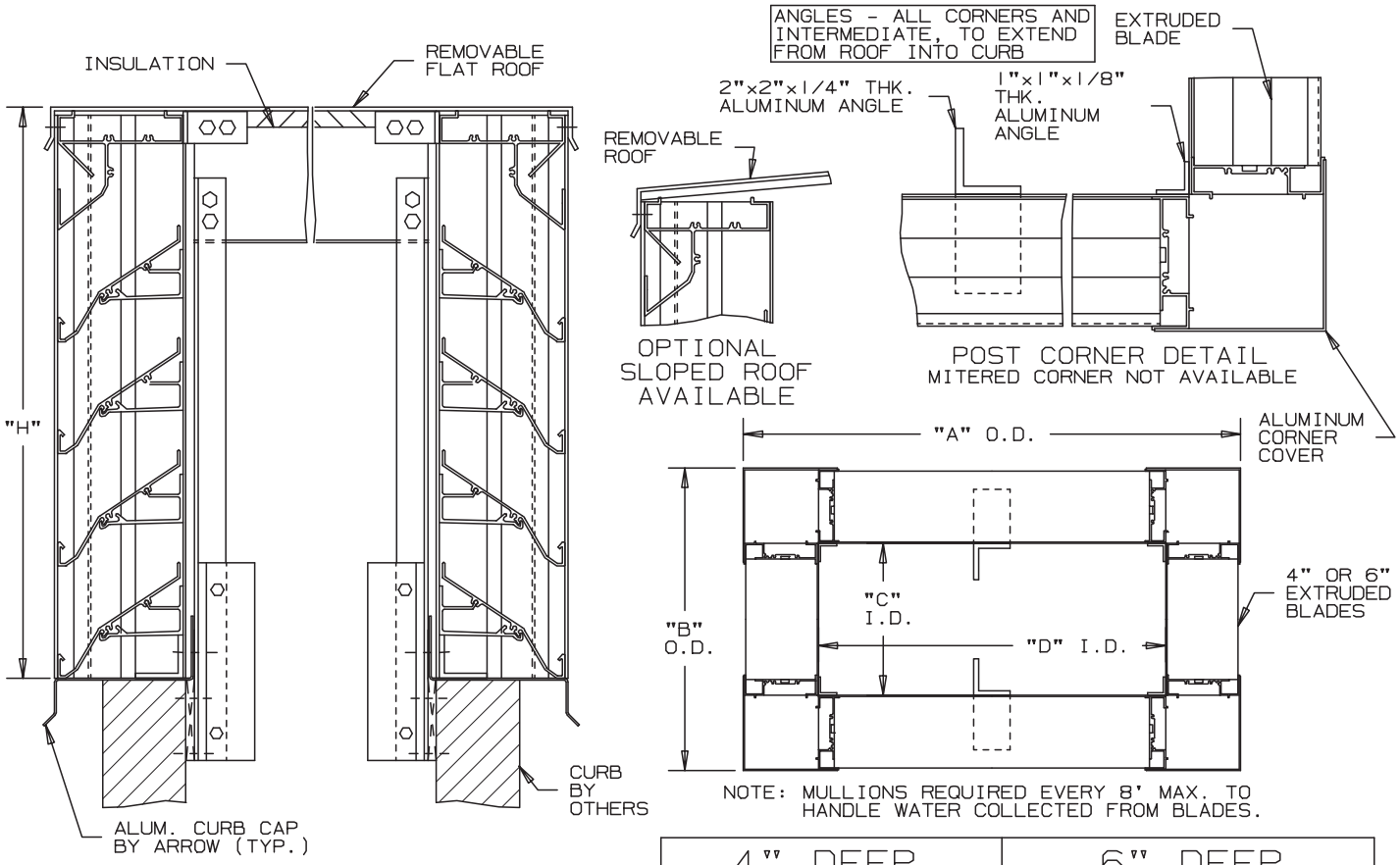

NOTE: MULLIONS REQUIRED EVERY 8' MAX. TO HANDLE WATER COLLECTED FROM BLADES.

4" DEEP	6" DEEP
PHL4DP "DRAIN" BLADE	PHL6DP "DRAIN" BLADE

SPECIFICATIONS

MATERIAL:	EXTRUDED ALUMINUM SECTIONS OF ( ).081",( ).125" THICKNESS OF 6063-T52/T6 ALLOY. WITH REINFORCING RIB BOSSES.
ROOF:	REMOVABLE ROOF .060" THK. SHEET ALUMINUM REINFORCED WITH ALUMINUM BRACING WHERE REQUIRED TO TAKE A SNOW LOAD OF 40 LBS./SQ.FT. PLUS A REQUIRED SAFETY FACTOR.
INSULATION:	UNDERSIDE OF ROOF IS LINED WITH 1/2" THK. INSULATION.
SCREENS:	(WHEN INDICATED) BIRD SCREEN - 1/2" SQUARE MESH, 19 GA. GALVANIZED STEEL, ON INTERIOR.
NOTE:	PENTHOUSE DIMENSIONS "A" OR "B" EXCEEDING 84" SHALL BE SHIPPED IN SECTIONS FOR FIELD ASSEMBLY BY OTHERS.

ITEM	QTY.	"A"	"B"	"C"	"D"	"H"	MULL	TYPE	LOC
								SCREENS	

SHEET METAL WORKERS INTERNATIONAL ASSOCIATION
UNION MADE

Anemostat Air Distribution
1220 E. Watson Center Road
Carson, CA 90745
310-835-7500 • air@anemostat.com
www.anemostat-hvac.com

AGENT: _____

ARCH./ENG.:
CONTR.:
PROJECT:
EDR: ECN: JOB:
DATE: DWN.: DWG.:

Anemostat®
AIR DISTRIBUTION

MODEL **PHL4DP / PHL6DP**

LOUVERED PENTHOUSE EXTRUDED ALUMINUM
4" AND 6" DEEP BLADES

EXTERIOR FASTENING INSTALLATION

POST CORNER - 4" OR 6" BLADE WIDTH
DRAINABLE - STATIONARY

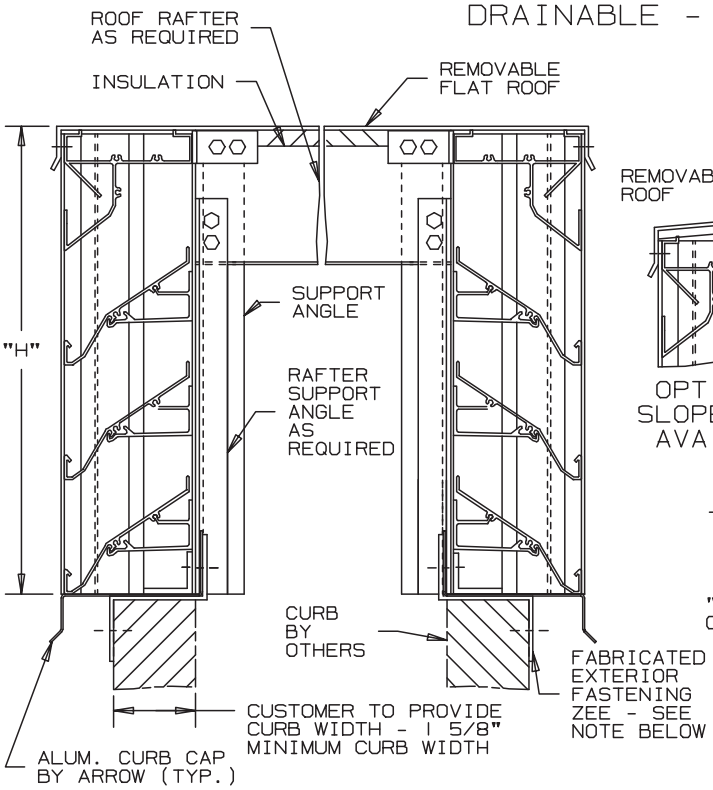

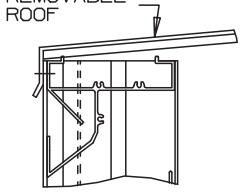

OPTIONAL SLOPED ROOF AVAILABLE

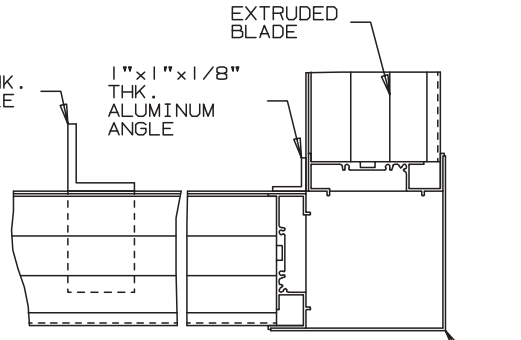

POST CORNER DETAIL
MITERED CORNER NOT AVAILABLE

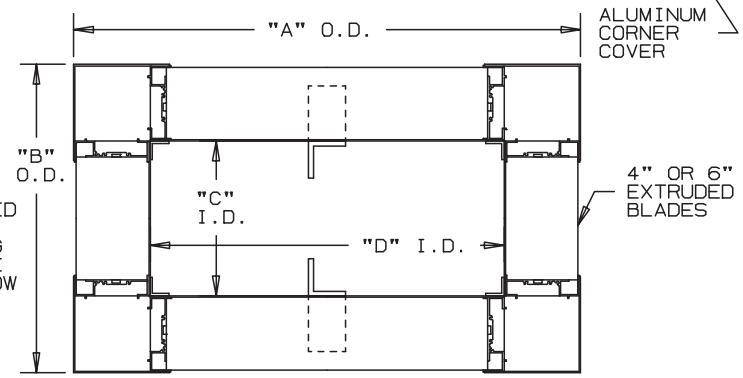

NOTE: MULLIONS REQUIRED EVERY 8' MAX. TO HANDLE WATER COLLECTED FROM BLADES.

*NOTE:
EXTERIOR MOUNTING ZEE CLIPS SUPPLIED 2" LONG, SPACED NO MORE THAN 4" FROM EACH CORNER AND 12" O.C. MAXIMUM.

4" DEEP	6" DEEP
PHL4DP "DRAIN" BLADE	PHL6DP "DRAIN" BLADE

SPECIFICATIONS

MATERIAL:	EXTRUDED ALUMINUM SECTIONS OF ( ).081",( ).125" THICKNESS OF 6063-T52/T6 ALLOY. WITH REINFORCING RIB BOSSES.
ROOF:	REMOVABLE ROOF .060" THK. SHEET ALUMINUM REINFORCED WITH ALUMINUM BRACING WHERE REQUIRED TO TAKE A SNOW LOAD OF 40 LBS./SQ.FT. PLUS A REQUIRED SAFETY FACTOR.
INSULATION:	UNDERSIDE OF ROOF IS LINED WITH 1/2" THK. INSULATION.
SCREENS:	(WHEN INDICATED) BIRD SCREEN - 1/2" SQUARE MESH, 19 GA. GALVANIZED STEEL, ON INTERIOR.
NOTE:	PENTHOUSE DIMENSIONS "A" OR "B" EXCEEDING 84" SHALL BE SHIPPED IN SECTIONS FOR FIELD ASSEMBLY BY OTHERS.

ITEM	QTY.	"A"	"B"	"C"	"D"	"H"	MULL	TYPE	LOC	CURB WIDTH	
								SCREENS			

SHEET METAL WORKERS INTERNATIONAL ASSOCIATION
UNION MADE

Anemostat Air Distribution
1220 E. Watson Center Road
Carson, CA 90745
310-835-7500 • air@anemostat.com
www.anemostat-hvac.com

AGENT: _____

ARCH./ENG.:
CONTR.:
PROJECT:
EDR: ECN: JOB:
DATE: DWN.: DWG.: