SUBMITTAL SHEET

Anemostat®
A MESTEK COMPANY
P.O. BOX 4938 • 1220 WATSONCENTER ROAD • CARSON, CA 90745-4206
(310) 835-7500 • FAX (310) 835-0448
e-mail: airsec@anemostat.com • website: www.anemostat.com

ASLG

MAXIMUM SECURITY

EXTRA HEAVY DUTY BAR GRILLE

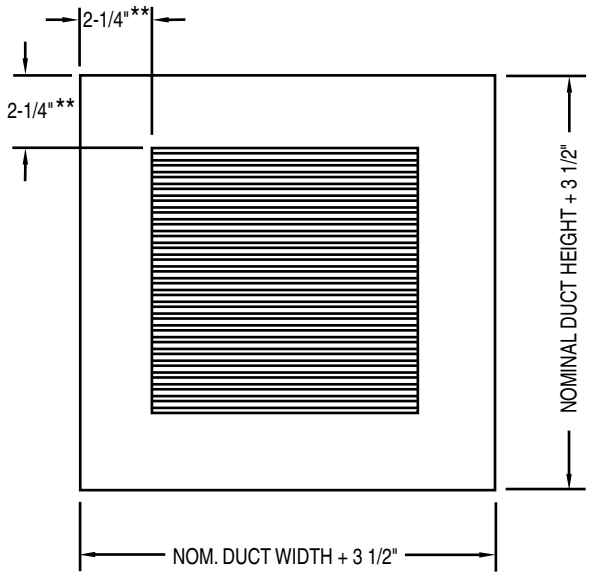

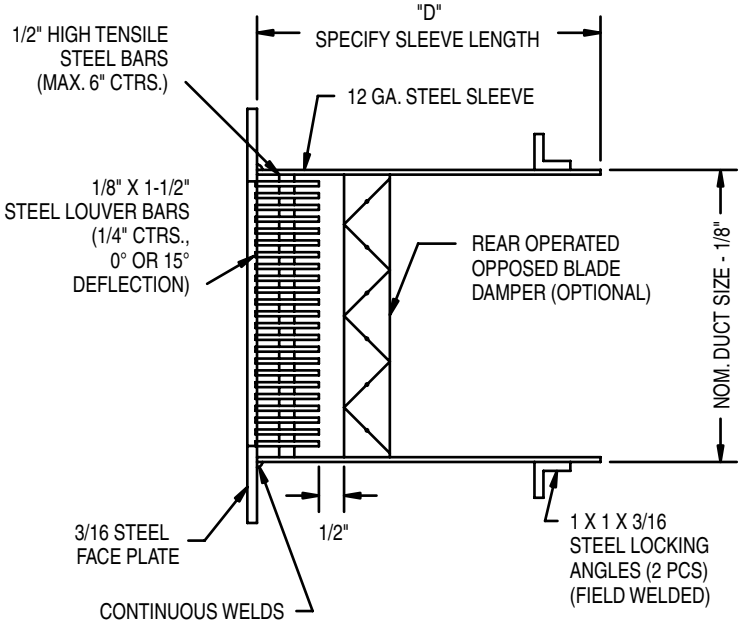

** 2-1/4" BORDER APPROXIMATE. THIS DIMENSION IS A FUNCTION OF SIZE AND PATTERN

IMPORTANT: It is the specifier's responsibility to properly configure the HVAC system to meet the appropriate level of comfort, safety, security and detention

PRODUCT FEATURES

Face Plate
- ☐ 3/16" **(standard)** ☐ 12 GA. (optional)
- ☐ 10 GA. (optional) ☐ Other _____

Louver Bars
- ☐ 0° Deflection **(standard)**
- ☐ 15° Deflection (optional)

Sleeve
- ☐ 12 GA. **(standard)** ☐ 3/16" (optional)
- ☐ 10 GA. (optional) ☐ Other _____

Locking Angles (two pieces)
- ☐ 1" x 1" x 3/16" **(standard)**
- ☐ 1-1/2" x 1-1/2" x 3/16" (optional)
- ☐ 2" x 2" x 3/16" (optional)
- ☐ Other _____

Material
- ☐ Cold Rolled Steel **(standard)**
- ☐ *Stainless Steel (optional)
- ☐ *Aluminum (optional)
- ☐ *Galvanized (optional)
- ☐ Other _____

*consult factory for availability

Opposed Blade Damper -(optional)
- ☐ Front Operated
- ☐ Rear Operated
- ☐ Other _____

Anchoring Studs -(optional)
- ☐ Nelson Type (3" x 3/8")
- ☐ Other _____

Locking Frame -(optional)
- ☐ 1" x 1" x 3/16" (field welded)
- ☐ Other _____

Adapter -(optional)
- ☐ Square to round (shipped loose)

Finish
- ☐ White Powder Coat **(standard)**
- ☐ Rust Inhibiting Prime Coat (optional)
- ☐ Other _____

Other Options (please specify)

_____

Qty.	Order Size (Nominal Duct)		Sleeve Length
	W" x	H"	D

SUBMITTAL APPROVAL

Job Name and Location			
Engineer	Date	Factory	Date
Mfr. Rep.	Date	Submitted By	Date