SUBMITTAL SHEET

Anemostat®
A MESTEK COMPANY
P.O. BOX 4938 • 1220 WATSONCENTER ROAD • CARSON, CA 90745-4206
(310) 835-7500 • FAX (310) 835-0448
e-mail: airsec@anemostat.com • website: www.anemostat.com

PLSL

MINIMUM SECURITY

DOOR LOUVER NON-VISION
INVERTED SPLIT "Y"
with LATTICE FACE PLATE

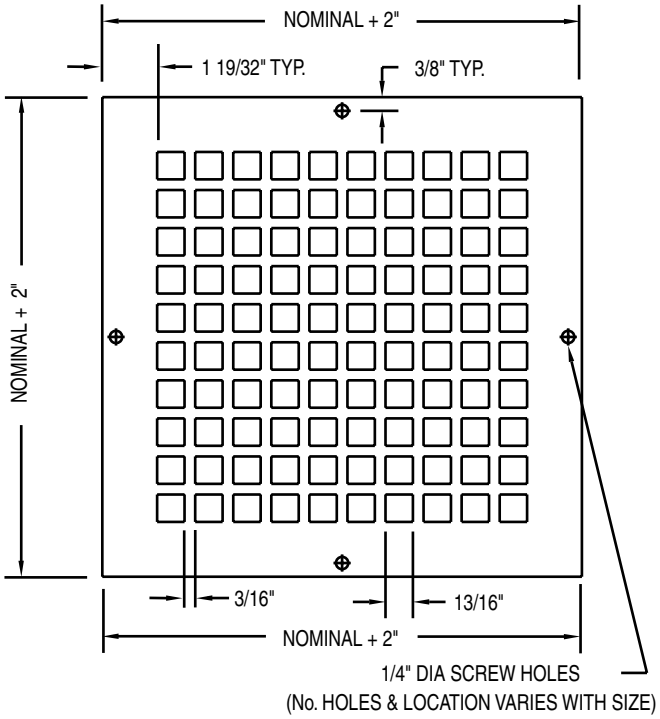

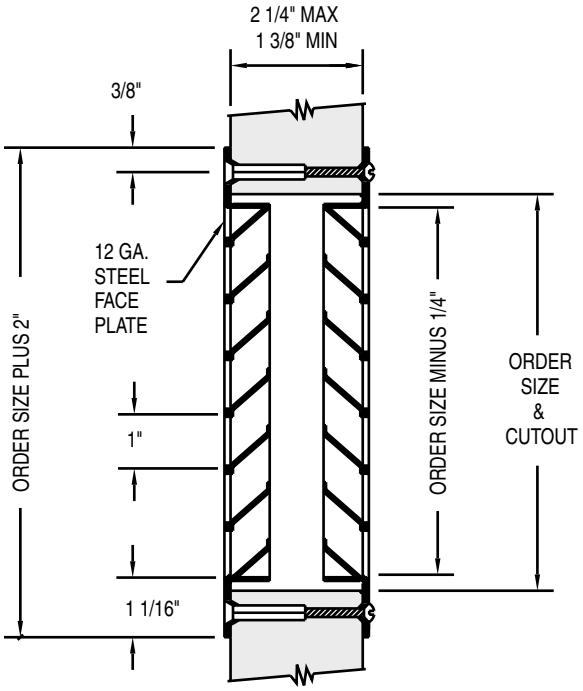

IMPORTANT: It is the specifier's responsibility to properly configure the HVAC system to meet the appropriate level of comfort, safety, security and detention

PRODUCT FEATURES

Lattice Face Plate - 12 GA

☐ 13/16" sq. holes on 1" ctrs. **(standard)**

Louver Blades

☐ 18 GA. **(standard)**

Material

☐ Cold Rolled Steel **(standard)**
☐ Stainless Steel (optional)
☐ Galvanized (optional)
  ☐ Zinc Plated
  ☐ Hot Dipped
☐ Other _____

Door Thickness

☐ 1 3/4" **(standard)**
☐ Other _____

Fasteners

☐ #8 x 32 Phillips - blank head one side **(standard)**
☐ Tamperproof _____
☐ Other _____

Finish

☐ White Baked Enamel **(standard)**
☐ Beige Baked Enamel (optional)
☐ Bronze Baked Enamel (optional)
☐ Grey Primer (optional)
☐ Other _____

Other Options (please specify)

_____

_____

Qty.	Order Size	
	Width	Height

• **NOTE:** For Exterior use, High Humidity or Salt Air application, product must be galvanized or stainless steel

SUBMITTAL APPROVAL

Job Name and Location			
Engineer	Date	**Factory**	Date
Mfr. Rep.	Date	**Submitted By**	Date